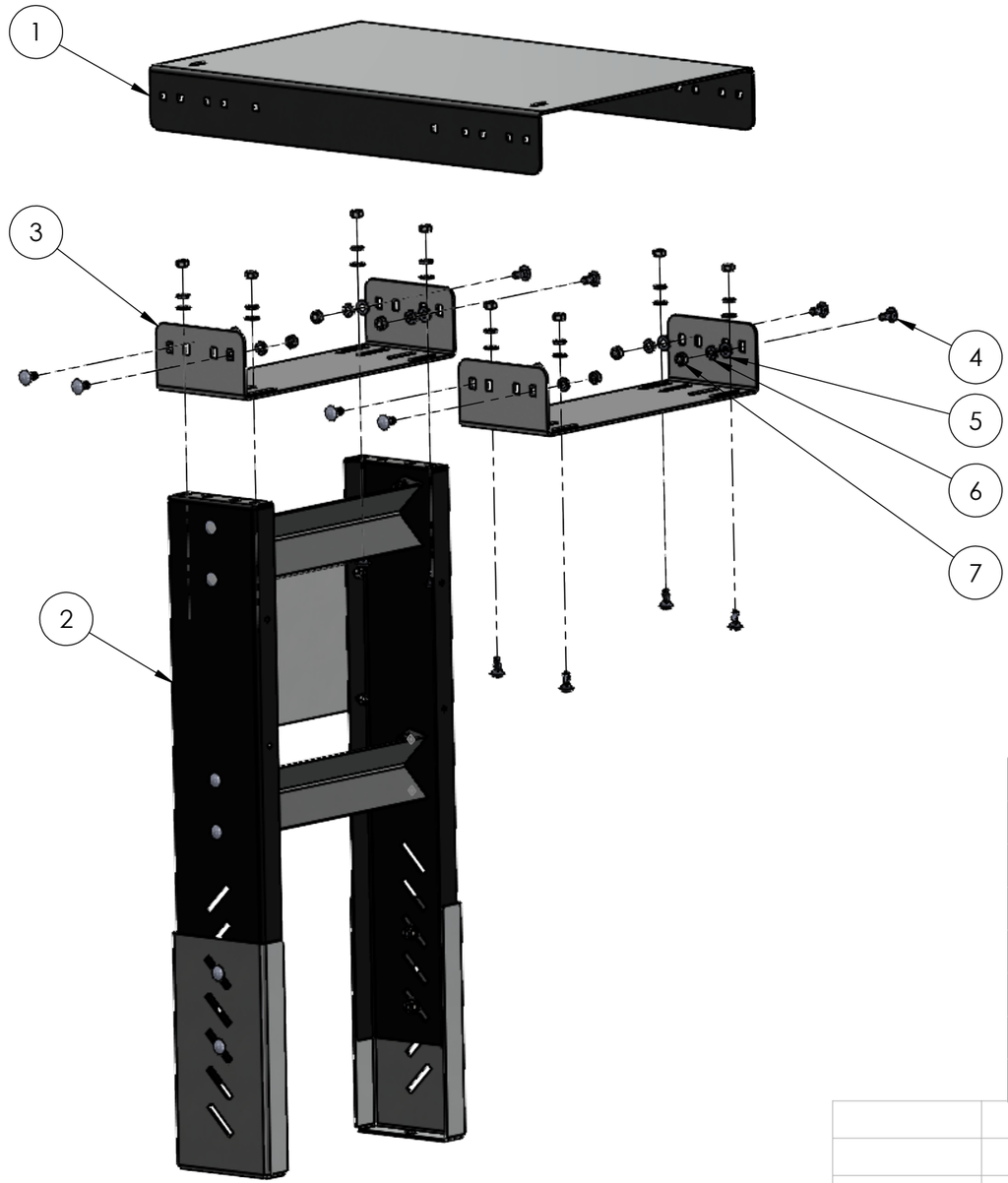

ITEM NO.	PART NUMBER	DESCRIPTION	QTY.
1	084190-08	Table, 2', NARROW	1
2	040029-04	ASSY, ADJ LEG 15"	1
3	084194-02	CROSS BRACE, FORMED TABLE	2
4	096779-00	CRG BOLT, 5/16-18 X .75	16
5	099361-16	5/16" FLAT WASHER	16
6	099384-07	5/16" LOCK WASHER	16
7	099370-07	5/16"-18 HEX NUT	16

PROPRIETARY AND CONFIDENTIAL

THE INFORMATION CONTAINED IN THIS DRAWING IS THE SOLE PROPERTY OF <INSERT COMPANY NAME HERE>. ANY REPRODUCTION IN PART OR AS A WHOLE WITHOUT THE WRITTEN PERMISSION OF <INSERT COMPANY NAME HERE> IS PROHIBITED.

NEXT ASSY | USED ON

APPLICATION

UNLESS OTHERWISE SPECIFIED:

DIMENSIONS ARE IN INCHES
TOLERANCES:
FRACTIONAL ±
ANGULAR: MACH ± BEND ±
TWO PLACE DECIMAL ±
THREE PLACE DECIMAL ±

INTERPRET GEOMETRIC TOLERANCING PER:

MATERIAL

FINISH

DO NOT SCALE DRAWING

	NAME	DATE
DRAWN	MAL	07/11/25
CHECKED		
ENG APPR.		
MFG APPR.		
Q.A.		

COMMENTS:

TITLE:

TABLE ASM-FLAT,STEEL, FORMED,15X24

SIZE	DWG. NO.	REV
B	040032-02-15-00	

SCALE: 1:24 | WEIGHT: | SHEET 1 OF 1