Description	BAR Rail, Bottom, 1-7/16" x 5-7/16"	W&H Item #	3250-B

Printing may distort actual profile measurement. Print in "Actual Size", outer border should measure 8" x 10-1/2"

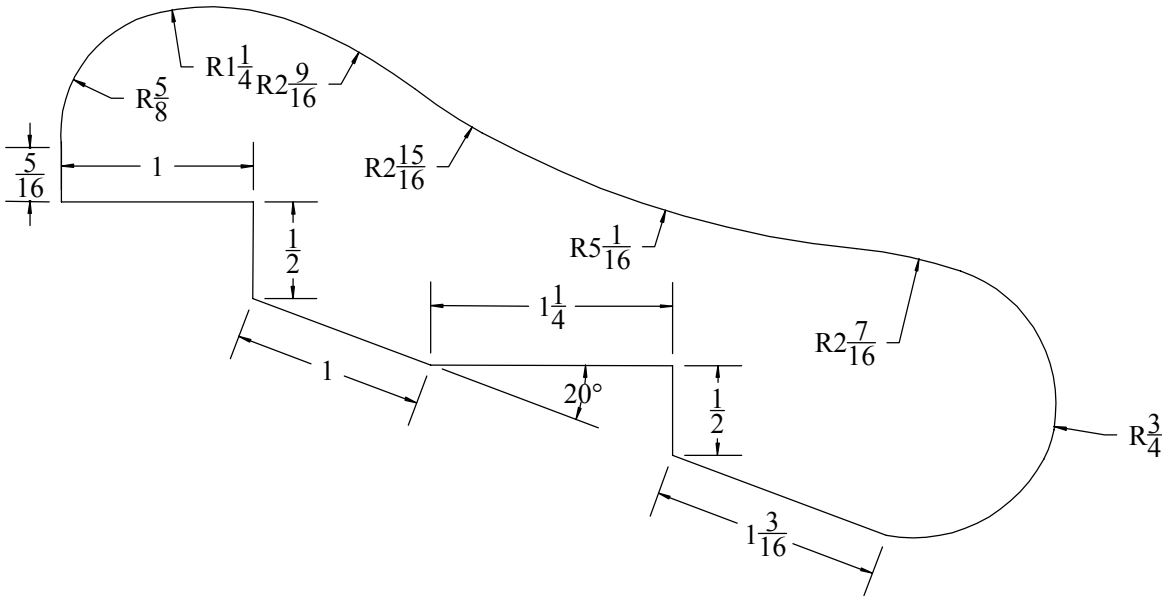

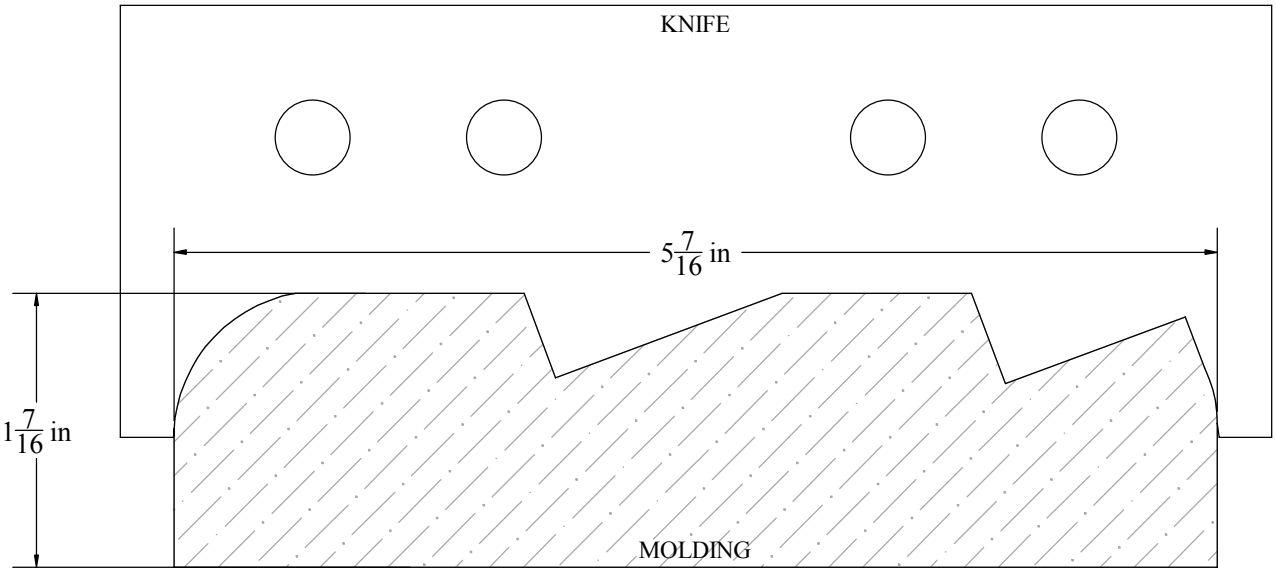

WILLIAMS & HUSSEY MACHINE CO
105 State Route 101A, Unit 4
Amherst, NH 03031

800-258-1380 or 603-732-0219
Fax 603-732-4048
www.williamsnhussey.com
customerservice@williamsnhussey.com

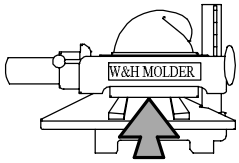

KNIFE ORIENTATION SHOWN FROM THE INFEED SIDE OF MOLDER